# MODEL
# 6400
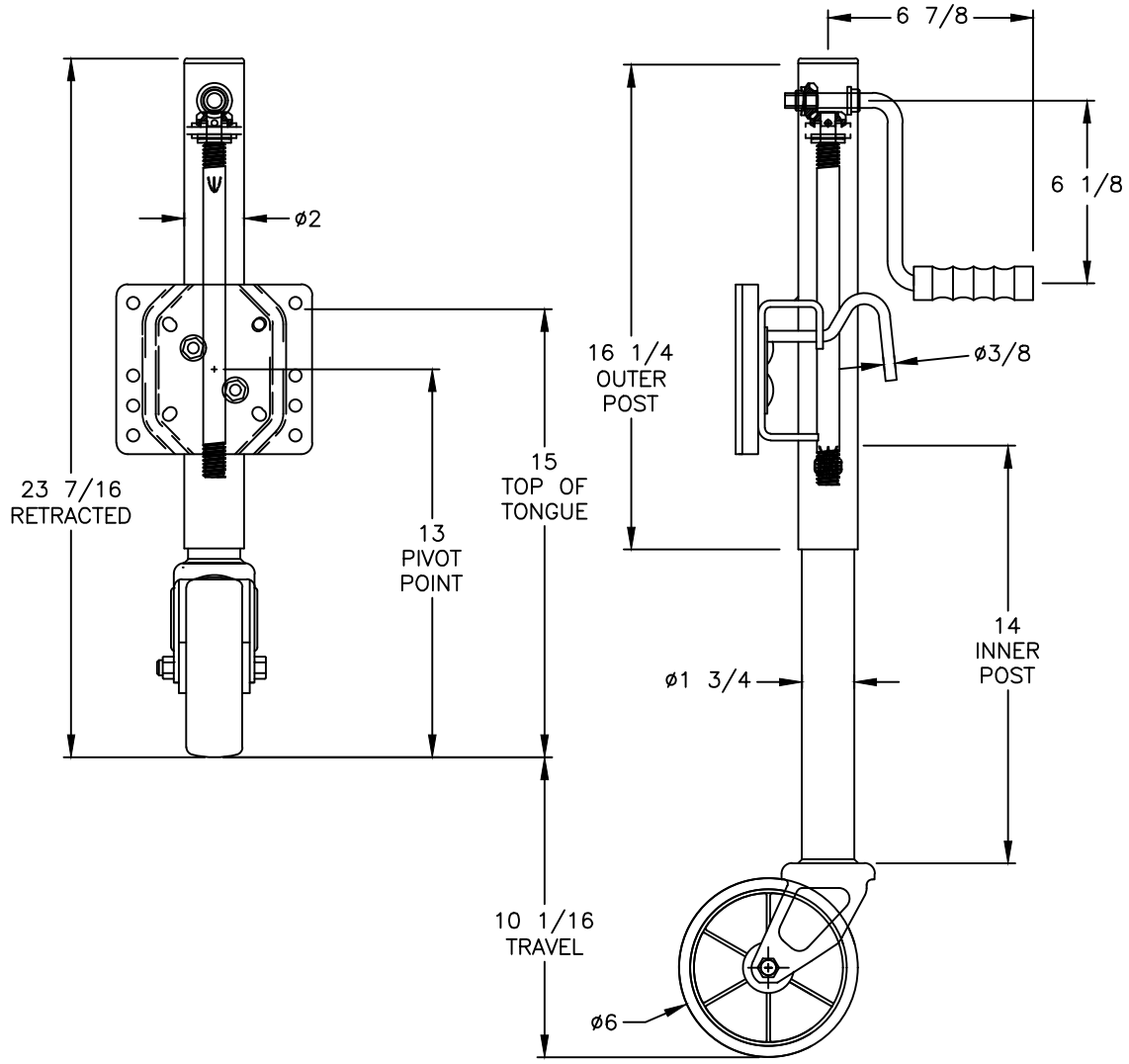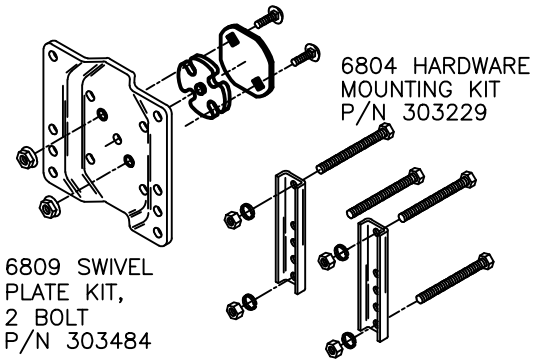
1000lb/454kg CAPACITY
MARINE JACK
P/N 22457