MODEL SA5000/7000

SA5000 DC–1500lb/681kg CAPACITY
SA5000 AC–1200lb/545kg CAPACITY
SA7000 DC–2200lb/999kg CAPACITY
SA7000 AC–1800lb/817kg CAPACITY
StrongArm ELECTRIC WINCH

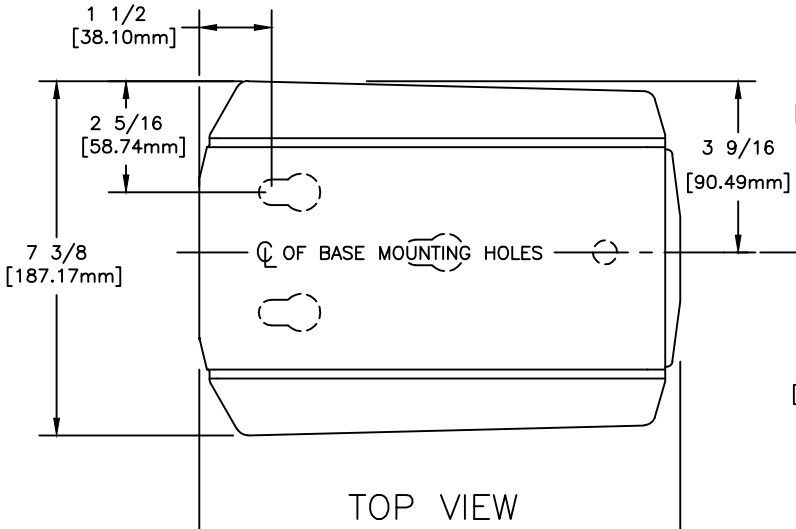

TOP VIEW

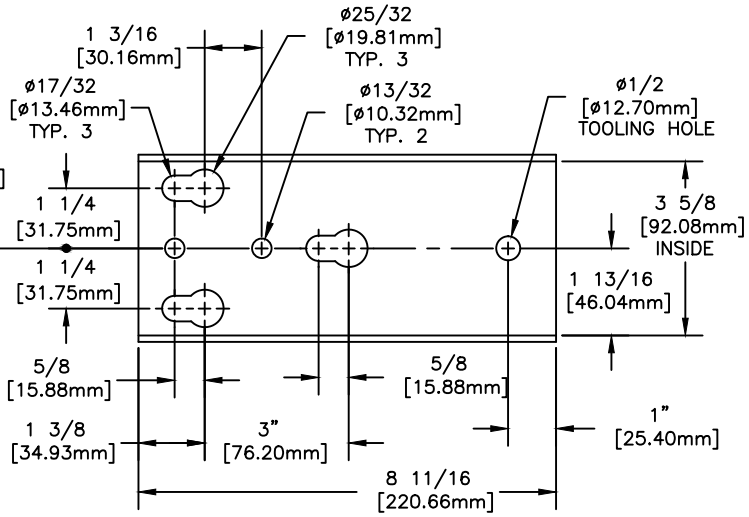

BASE HOLE PATTERN

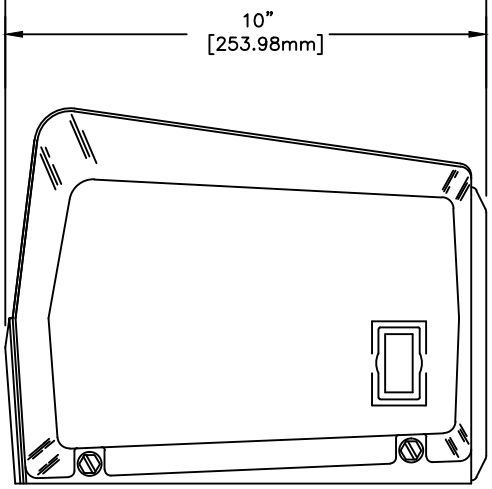

SIDE VIEW

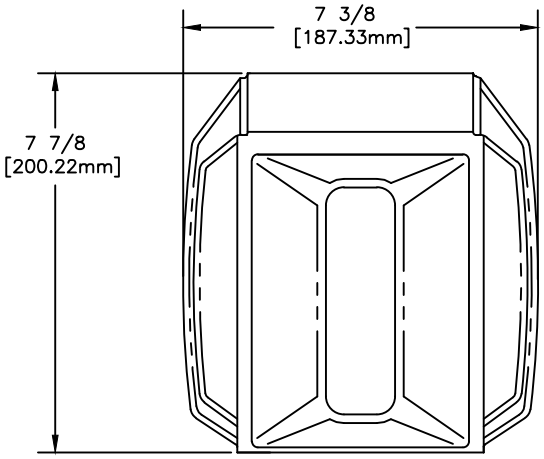

FRONT VIEW